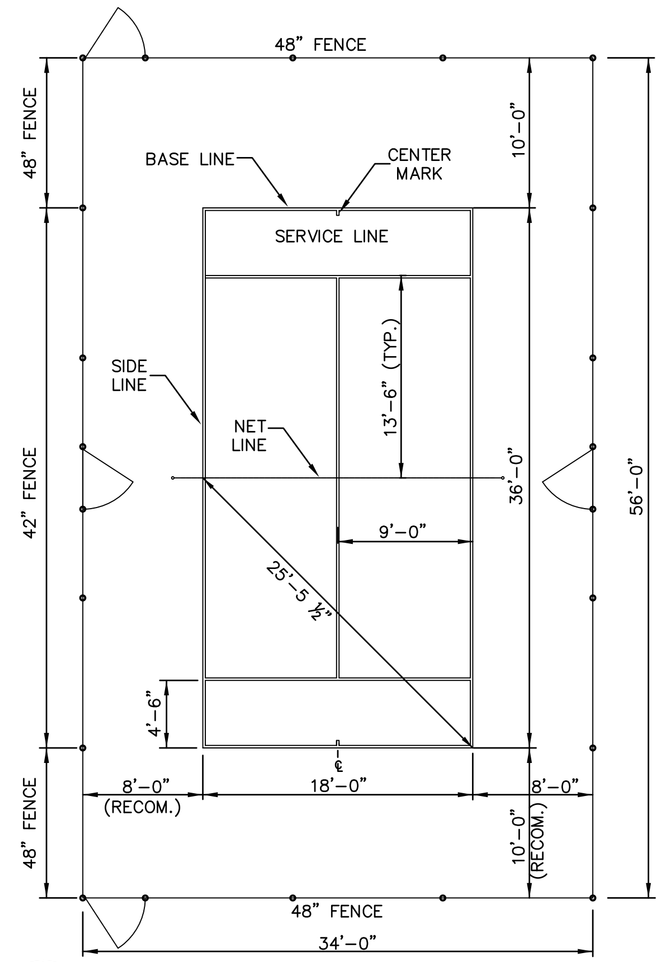

1 / T-1 36 FOOT QUICKSTART COURT LINE LAYOUT
NOT TO SCALE

NOTES:
1. ALL 36 FOOT COURT PLAYING LINES SHALL BE 2" WIDE.
2. ALL 36 FOOT COURT LINES SHALL BE MEASURED TO THE OUTSIDE EDGE OF THE LINES, WITH THE EXCEPTION OF THE CENTER LINES WHICH SHALL BE MEASURED OUT TO CENTER.
3. NET POSTS SHALL BE SET 22 FEET APART, MEASURED FROM THE CENTER OF EACH POST. THE NET SHALL MEASURE 36 INCHES AT THE NET POST AND 33 INCHES AT THE CENTER OF THE COURT.
4. GATE LOCATIONS SHOWN ARE OPTIONAL PER THE COURT AND WILL VARY PER THE LOCAL SITE CONDITIONS.

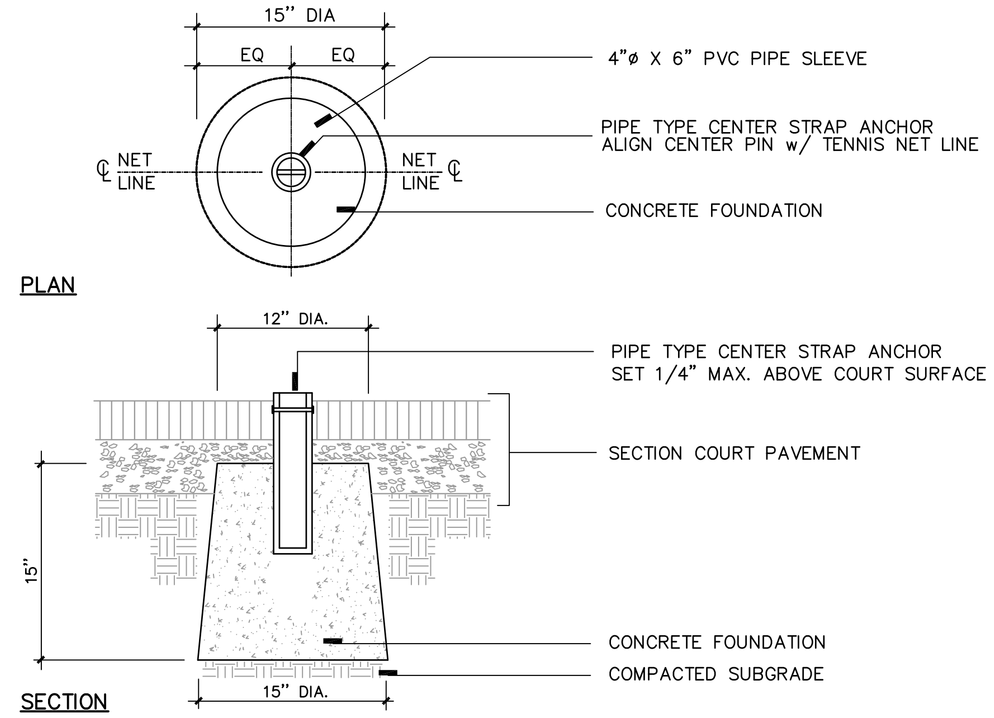

2 / T-1 CENTER STRAP ANCHOR DETAIL
NOT TO SCALE

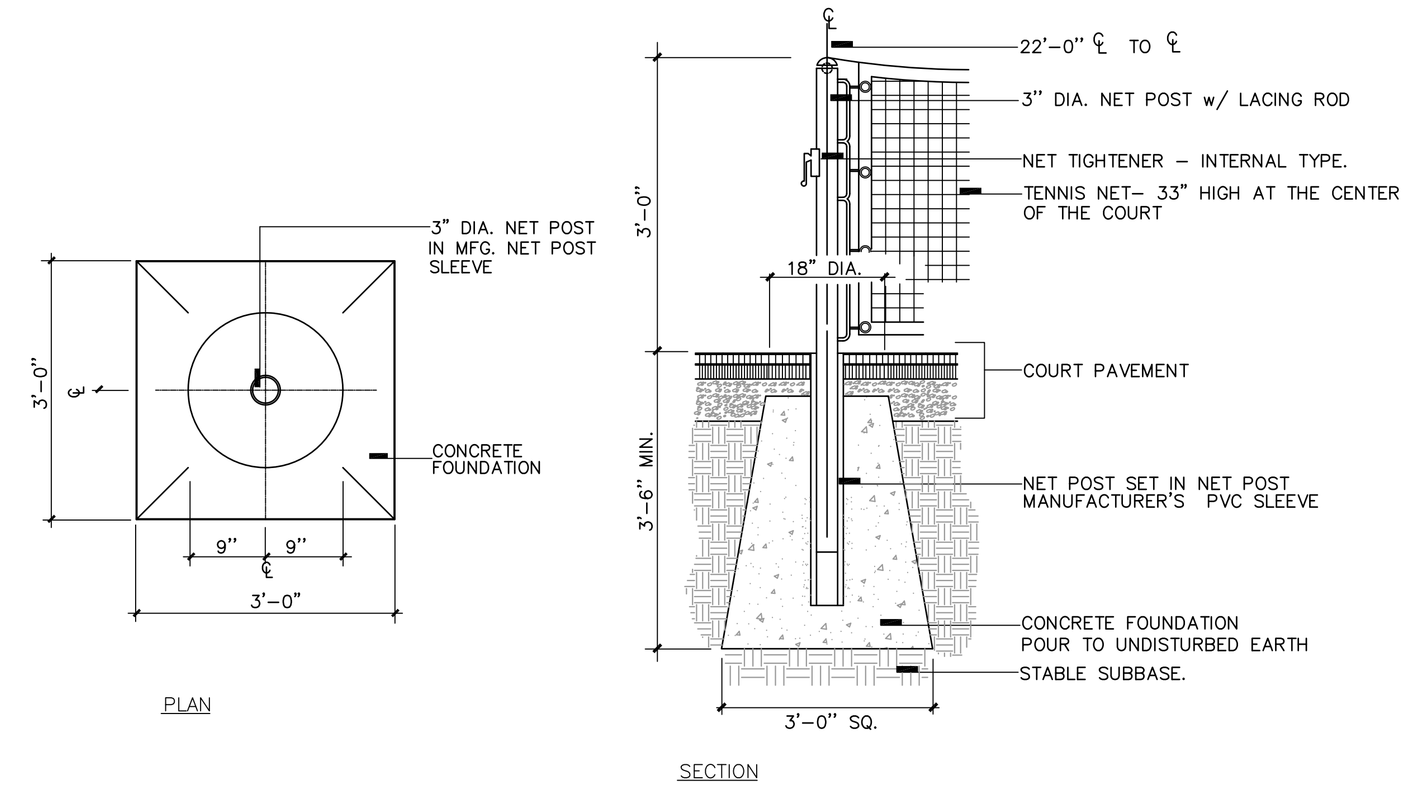

3 / T-1 NET POST DETAIL – 36 FOOT COURT
NOT TO SCALE

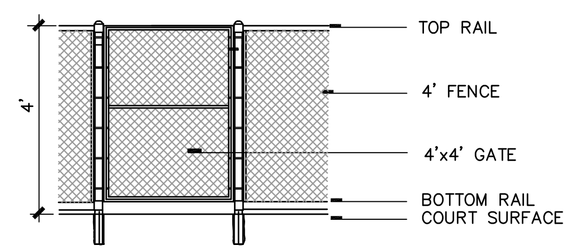

4 / T-1 TYPICAL ELEVATION– PLAYER ENTRANCE GATE
(INTO 36 FOOT QUICKSTART COURTS)
NOT TO SCALE

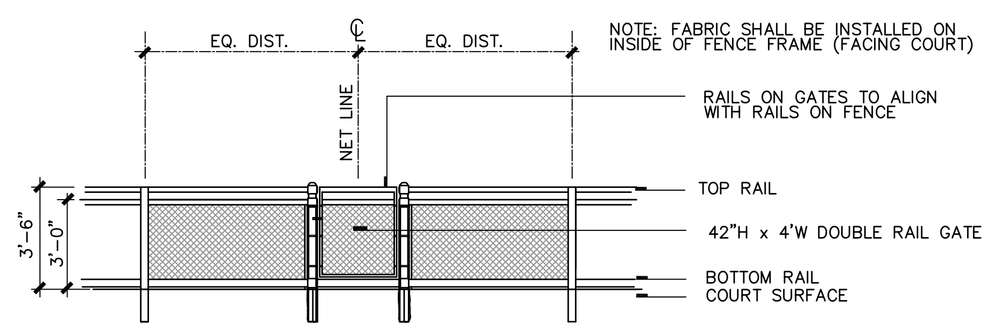

5 / T-1 ELEVATION– 42" HIGH SIDE FENCE
NOT TO SCALE

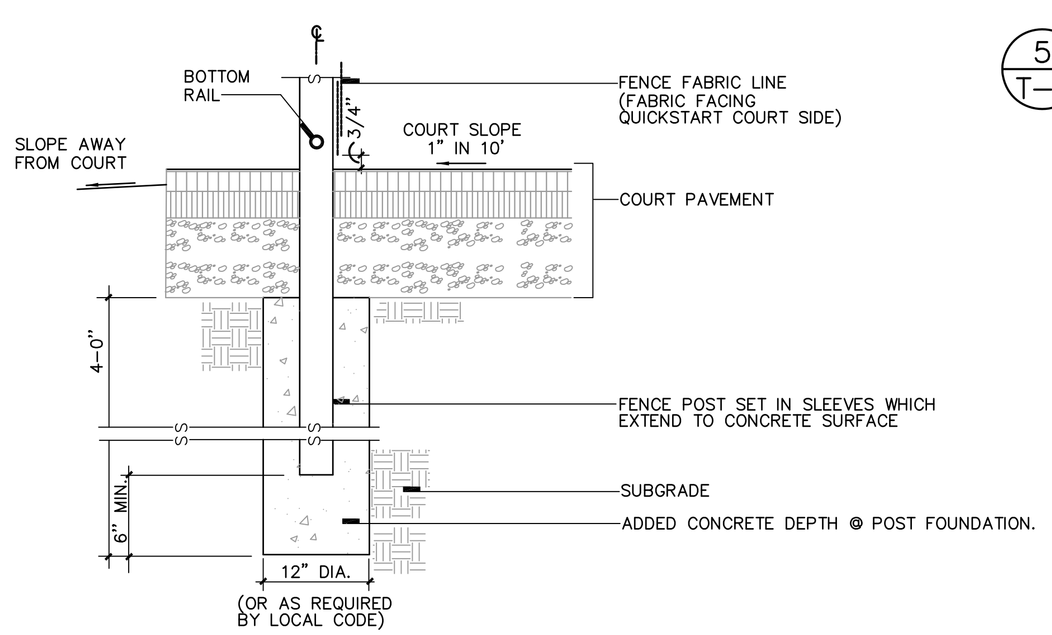

6 / T-1 SECTION– CONCRETE FENCE POST FOUNDATION
NOT TO SCALE

FUNCTION	SYMBOL	APPLICATION
RULES OF THE GAME		1 APPLICATION WHITE TEXTURED LINE PAINT (HAND PAINTED)
AESTHETICS		1 PERPENDICULAR APPLICATION FINE SAND TEXTURE COURSE (TINTED)
PLAYING CHARACTERISTICS		1 APPLICATION FINE SAND TEXTURE COURSE (TINTED) APPLY PERPENDICULAR TO PREVIOUS COURSE
PLAYING CHARACTERISTICS		1 APPLICATION FINE SAND TEXTURE COURSE (TINTED)
SUBSTRATE PREPARATION		2 APPLICATIONS COURSE SAND FILLER COATS (TINTED RESURFACER)
PAVEMENT SURFACE		PAVEMENT

7 / T-1 COURT SURFACING SYSTEM
NOT TO SCALE

NOTE:

1. PRIOR TO PAINTING LINES, PROVIDE ONE COAT OF LINE PRIMER TO SEAL TAPE EDGE FOR CRISP LINE EDGE. WAVY AND/OR FUZZY LINES WILL NOT BE ACCEPTED.

FENCE FABRIC SHALL BE INSTALLED ON THE COURT SIDE OF THE FENCE FRAME.

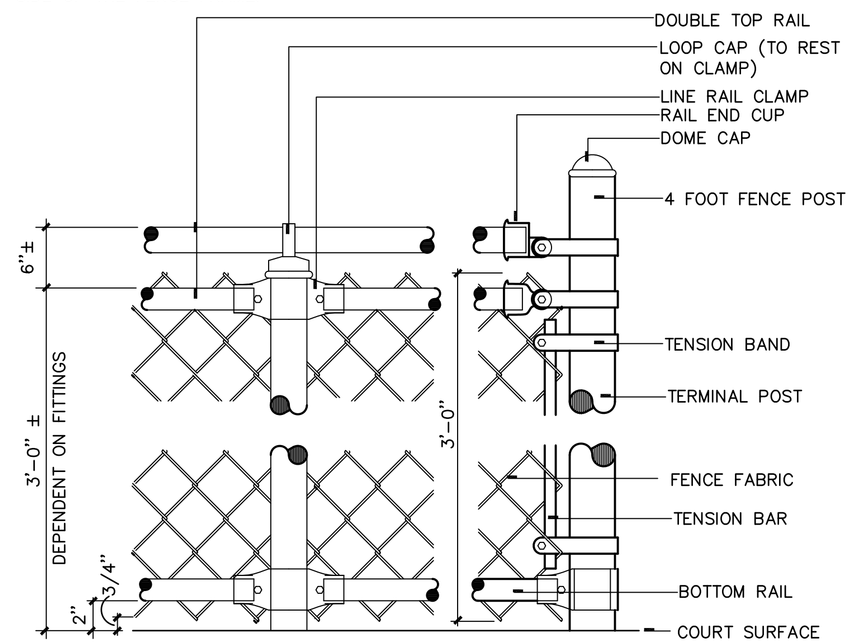

8 / T-1 ELEVATION ENLARGEMENT OPTIONAL SIDE FENCE
NOT TO SCALE

PROJECT NAME:

10 AND UNDER TENNIS

UNITED STATES TENNIS ASSOCIATION
70 WEST RED OAK LANE
WHITE PLAINS, NEW YORK 10604
DAVID W. LASOTA, TENNIS FACILITY CONSULTANT
VIRGIL CHRISTIAN, DIRECTOR, COMMUNITY TENNIS DEVELOPMENT
(914) 697-2366

DRAWING DATE:	NOVEMBER 4, 2010	DRAWN BY:	DWL
SCALE:	AS SHOWN	CHECKED BY:	VHC

DRAWING NAME:

36 FOOT COURT DETAILS – NEW CONSTRUCTION